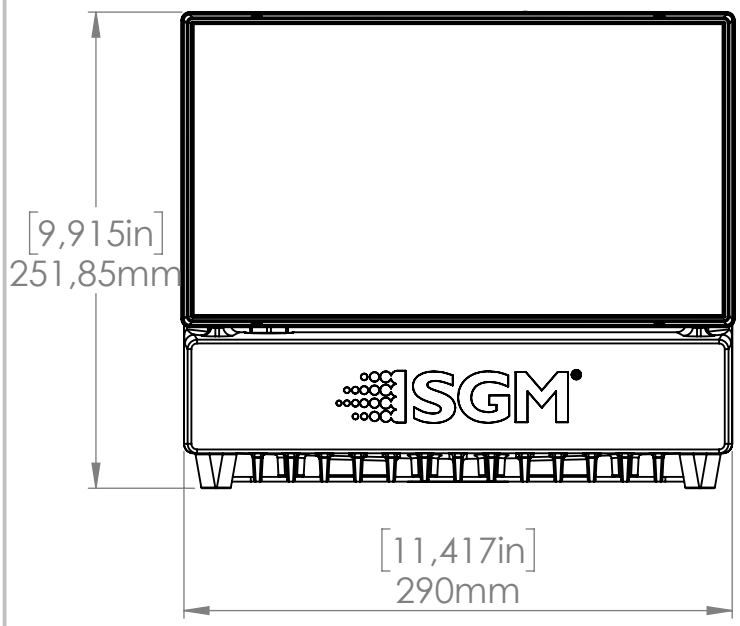

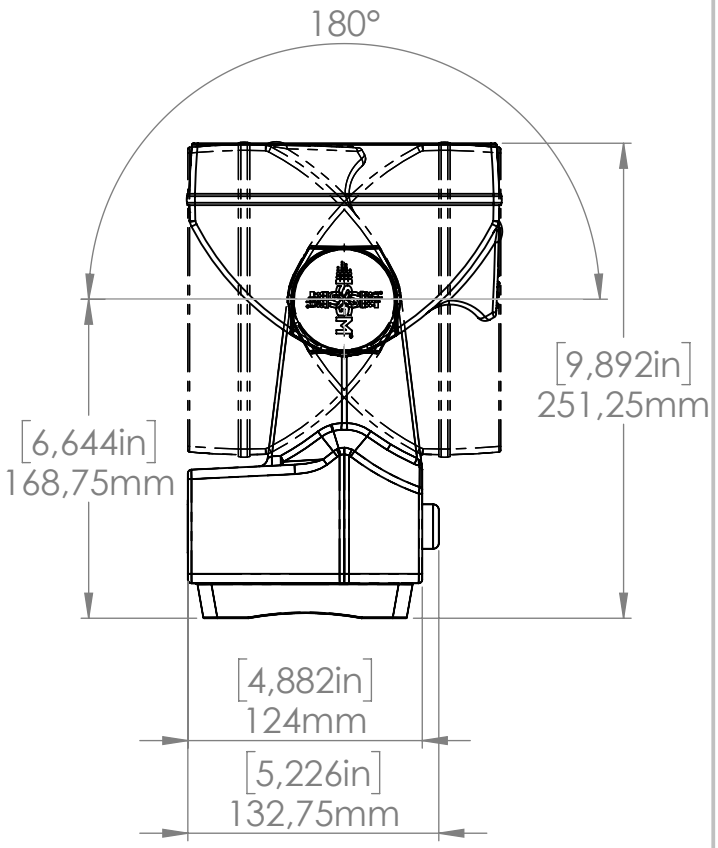

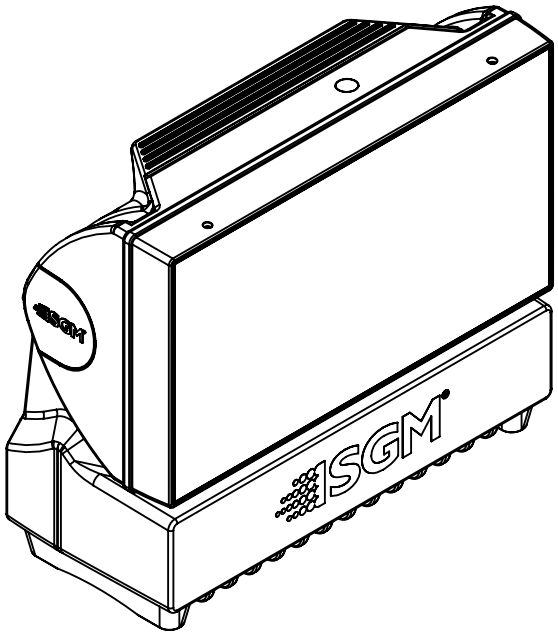

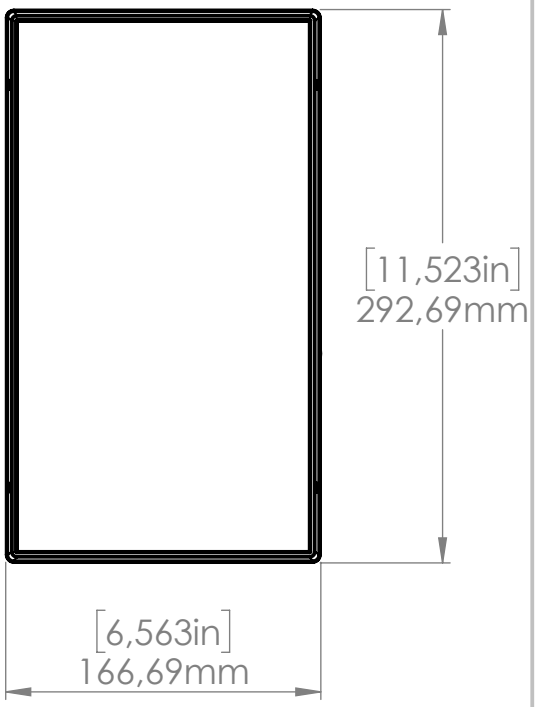

SGM®	SCALE:1:4	SHEET 1 OF 2	DWG NO.
	SHEET FORMAT: A4		80232000
	DO NOT SCALE DRAWING		

Copyright © SGM Light A/S. All rights reserved.

TITLE: P-3 POI, S, Gray

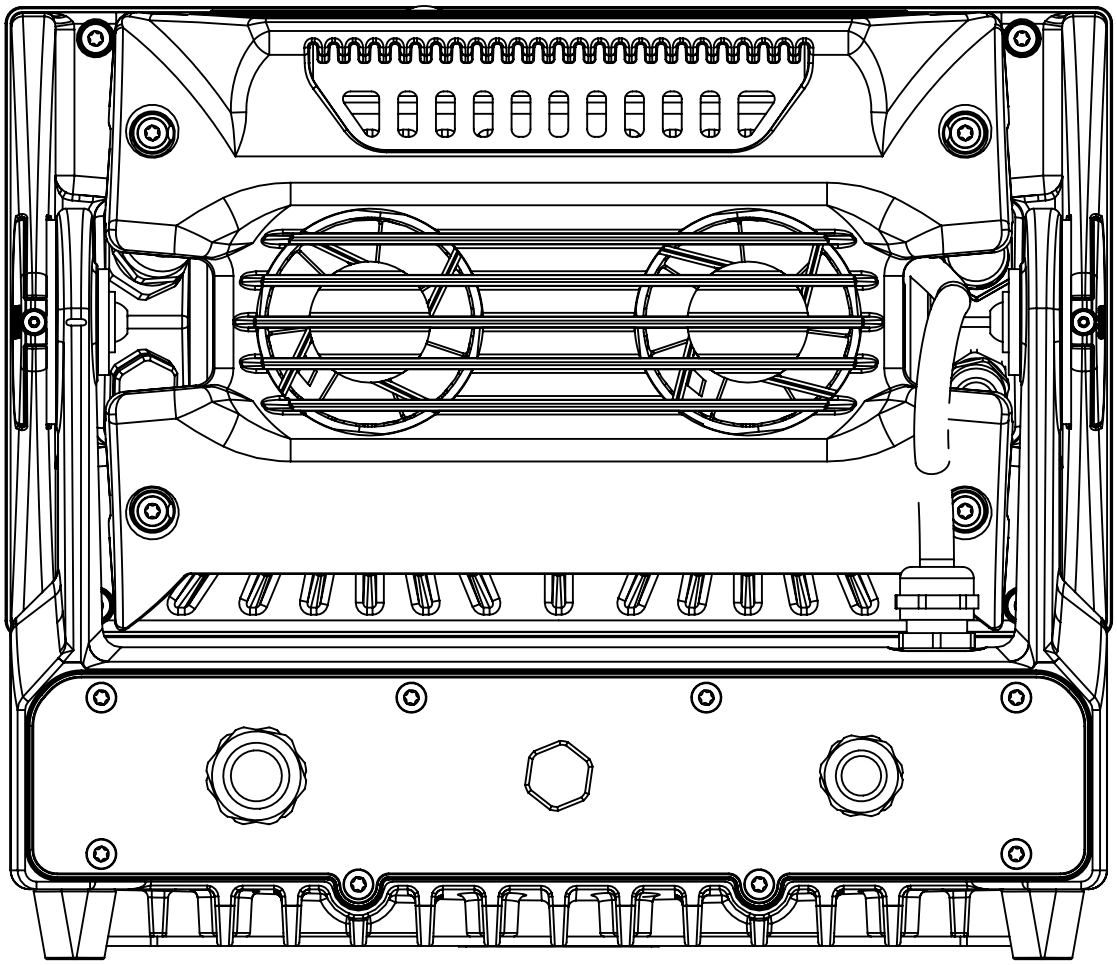

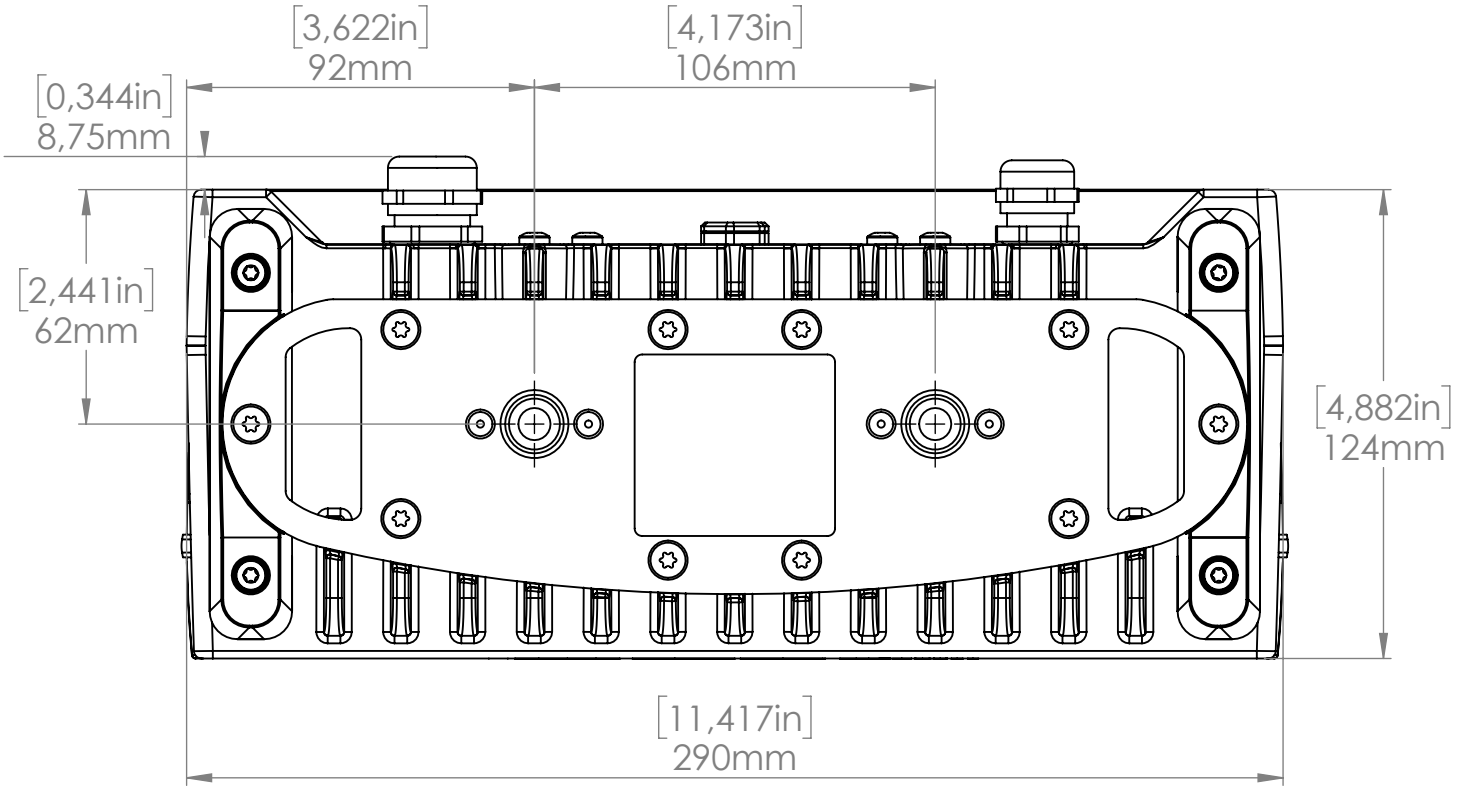

SGM®	SCALE:1:2	SHEET 2 OF 2	DWG NO.	TITLE:
	SHEET FORMAT: A4		80232000	P-3 POI, S, Gray
	DO NOT SCALE DRAWING			

Copyright © SGM Light A/S. All rights reserved.